LUCIA, WR

ASSEMBLY AND MOUNTING INSTRUCTIONS

UE-2591WR

GENERAL NOTES

- CAREFULLY UNPACK THE LUMINAIRE AND INSPECT FOR DAMAGE.
- PLEASE WEAR GLOVES TO PROTECT THE FINISH OF THE FIXTURE.
- SAVE THESE INSTRUCTIONS FOR FUTURE REFERENCE.

NOTICE

- FOR YOUR SAFETY AND PROPER OPERATION OF LUMINAIRE, READ AND UNDERSTAND ALL INSTRUCTIONS COMPLETELY BEFORE COMMENCING INSTALLATION OF THIS LUMINAIRE.
- THIS LUMINAIRE IS SUITED FOR DAMP LOCATIONS.
- THIS LUMINAIRE IS UL LISTED. WHEN INSTALLING LUMINAIRE, CONFORM TO ALL APPLICABLE LOCAL ELECTRICAL CODES, ORDINANCES, AND THE NATIONAL ELECTRICAL CODE (NEC).
- THIS PRODUCT IS RATED FOR TWO 60W TYPE A BULBS

⚠ CAUTION

THIS PRODUCT SHOULD BE INSTALLED ONLY BY A LICENSED ELECTRICIAN.

⚠ WARNING

THE ELECTRICITY MUST BE TURNED OFF AT THE MAIN FUSE BOX BEFORE INSTALLING THIS LUMINAIRE. TURNING POWER OFF USING THE LIGHT SWITCH MAY NOT BE SUFFICIENT TO PREVENT ELECTRICAL SHOCK.

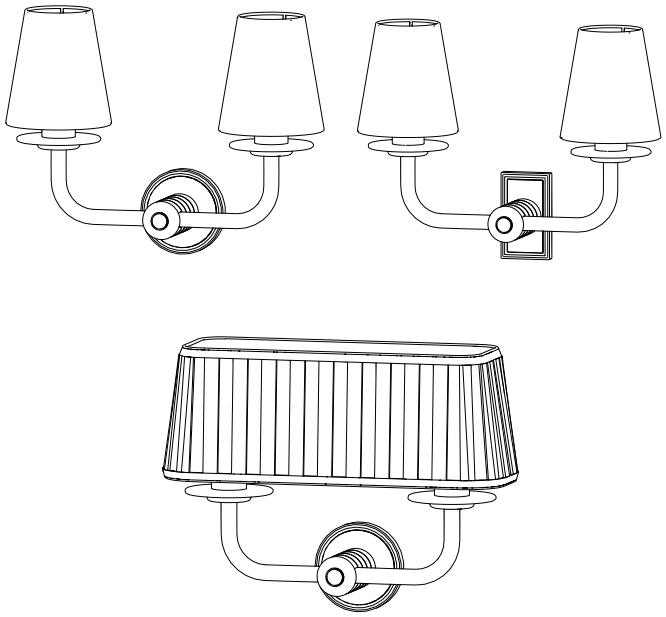

COMPONENTS PROVIDED FOR INSTALLATION

BOX 1

FIXTURE BODY	BULB (X2)	JUNCTION BOX SCREWS (X2)	HEX WRENCH	WIRENUT (X3)
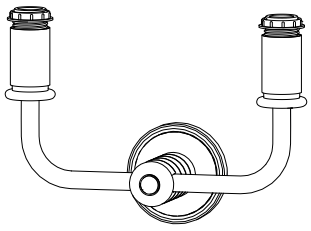	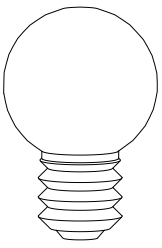	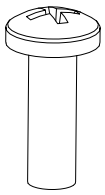	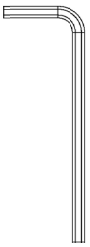	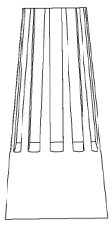

BACKPLATE EXTENSTION (OPTIONAL)	PANHEAD SCREW (X4-ROUND BXT - X2-RECTANGLE BXT)	FLATHEAD SCREW (X2-BXT)	WALL ANCHOR (X2 EACH-RECTANGLE BXT))
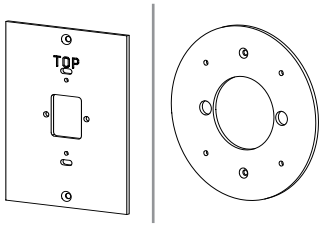	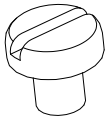	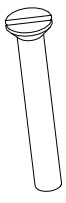	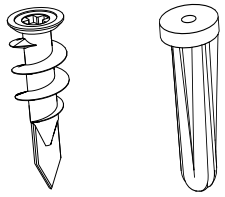

BOX 2

GLASS DIFFUSER (X2)	SHADE - ROUND OPTION (X2)	SHADE - RECTANGLE OPTION
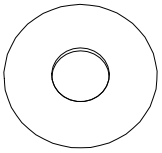		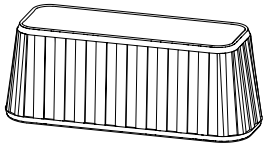

LUCIA, WR

ASSEMBLY AND MOUNTING INSTRUCTIONS

UE-2591WR

MOUNTING INSTRUCTIONS - 2 PERSON INSTALL

STEP 1

SHUT OFF THE MAIN ELECTRICAL SUPPLY TO THE JUNCTION BOX FROM THE FUSE BOX/CIRCUIT BREAKER. TURNING POWER OFF AT THE SWITCH IS NOT SUFFICIENT.

STEP 2

LOOSEN SET SCREW AT BASE OF FIXTURE BODY WITH PROVIDED HEX WRENCH. REMOVE MOUNTING PLATE.

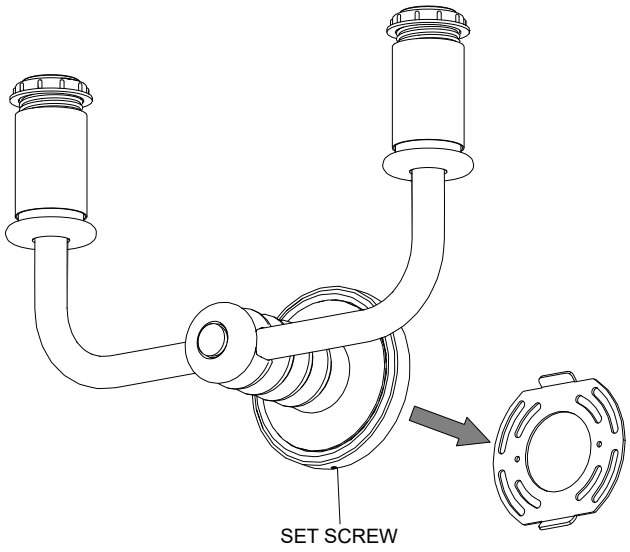

STEP 3 - ROUND PACKPLATE OPTION

OCTAGONAL JUNCTION BOX: ATTACH MOUNTING PLATE TO JUNCTION BOX WITH JUNCTION BOX SCREWS.

SINGLE GANG JUNCTION BOX: ATTACH ROUND BACKPLATE EXTENSION TO JUNCTION BOX WITH FLAT HEAD SCREWS ATTACH MOUNTING PLATE TO BACKPLATE EXTENSION WITH FOUR PANHEAD SCREWS

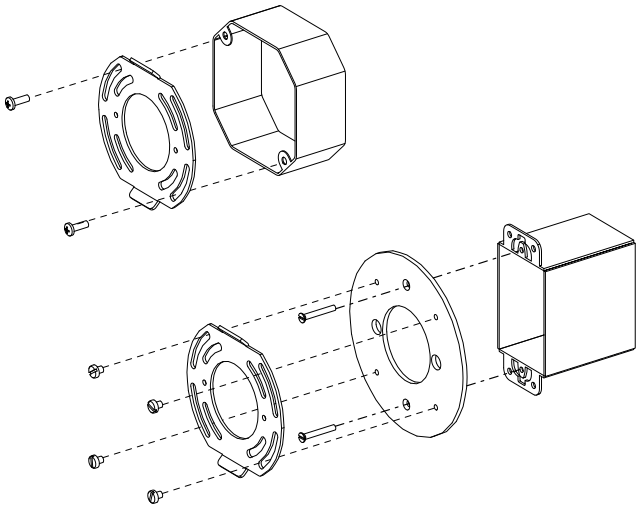

STEP 3 - RECTANGLE BACKPLATE OPTION

OCTAGONAL JUNCTION BOX: USE RECTANGLE BACKPLATE EXTENSION TO MARK HOLES FOR WALL ANCHORS. INSTALL WALL ANCHORS AND ATTACH BACKPLATE EXTENSION TO ANCHORS WITH FLAT HEAD SCREWS. ATTACH MOUNTING PLATE TO BACKPLATE EXTESNION WITH 2 PANHEAD SCREWS

SINGLE GANG JUNCTION BOX: ATTACH MOUNTING PLATE TO JUNCTION BOX WITH JUNCTION BOX SCREWS.

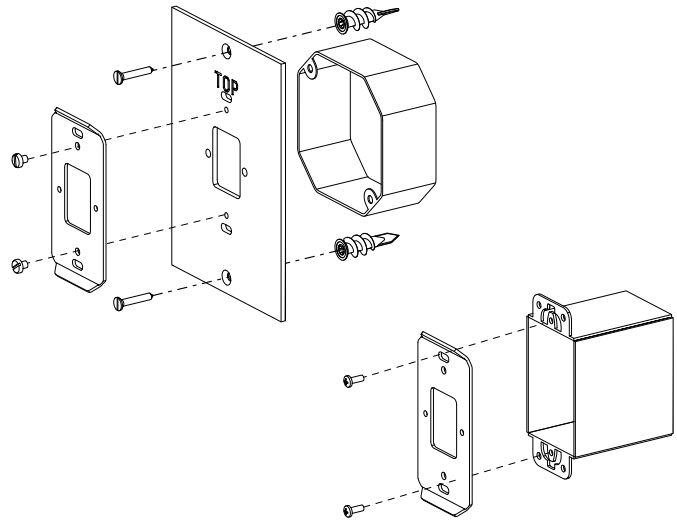

LUCIA, WR

ASSEMBLY AND MOUNTING INSTRUCTIONS

UE-2591WR

STEP 4

USING THE WIRE NUTS PROVIDED, MAKE ELECTRICAL CONNECTIONS BY FOLLOWING THE ELECTRICAL CONFIGURATION TABLE BELOW. ENSURE THAT ALL ELECTRICAL CONNECTIONS ARE WRAPPED WITH UL-LISTED ELECTRICAL TAPE.

IMPORTANT: NEVER ALLOW FIXTURE TO "HANG" FROM ELECTRICAL CONNECTIONS OR TO OTHERWISE PUT PRESSURE ON THE CONNECTIONS. THE WEIGHT OF THE FIXTURE SHOULD BE SUPPORTED BY THE MOUNTING ASSEMBLY.

STEP 5

SLIP BACKPLATE OVER MOUNTING PLATE AND TIGHTEN SET SCREW.

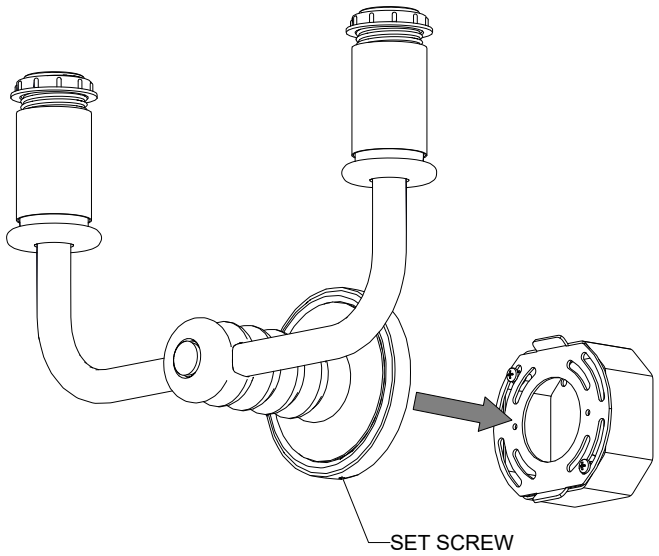

STEP 6

REMOVE SOCKET RINGS AND CANDLE SLEEVES

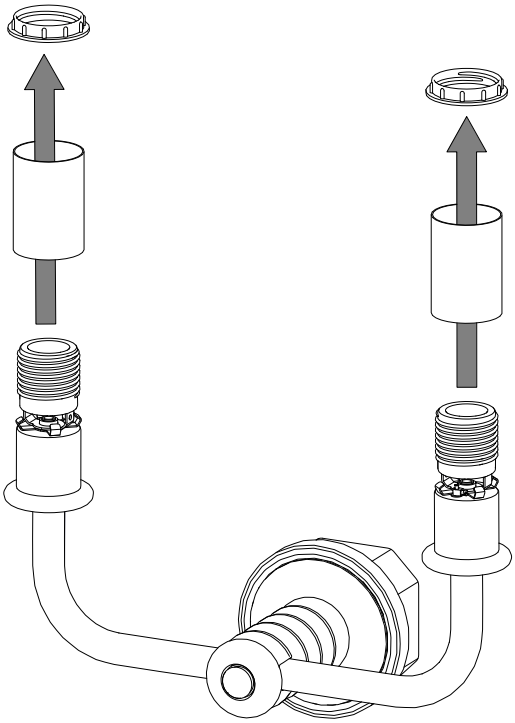

STEP 7

PLACE GLASS DIFFUSERS ON EACH ARM AND REATTACH CANDLE SLEEVES.

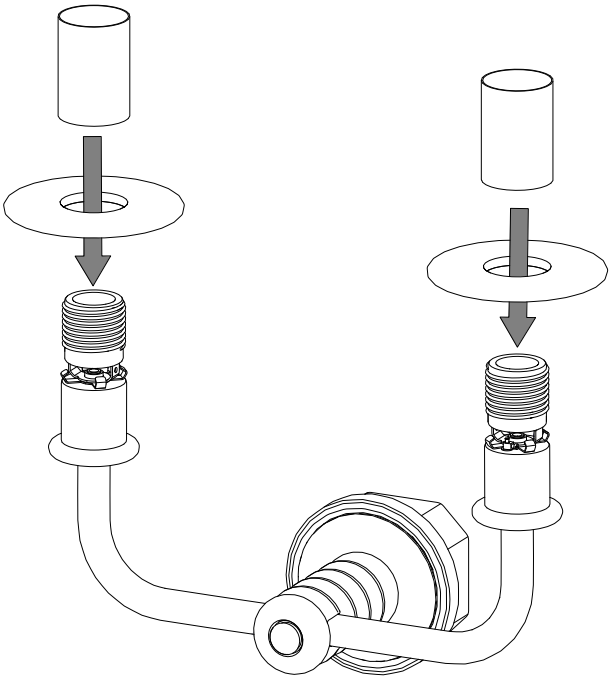

LUCIA, WR

ASSEMBLY AND MOUNTING INSTRUCTIONS

UE-2591WR

STEP 8

SLIP SHADES OVER SOCKETS AND REATTACH SOCKET RINGS. INSTALL BULBS AND RETURN POWER TO CIRCUIT. CONFIRM PROPER OPERATION OF FIXTURE.

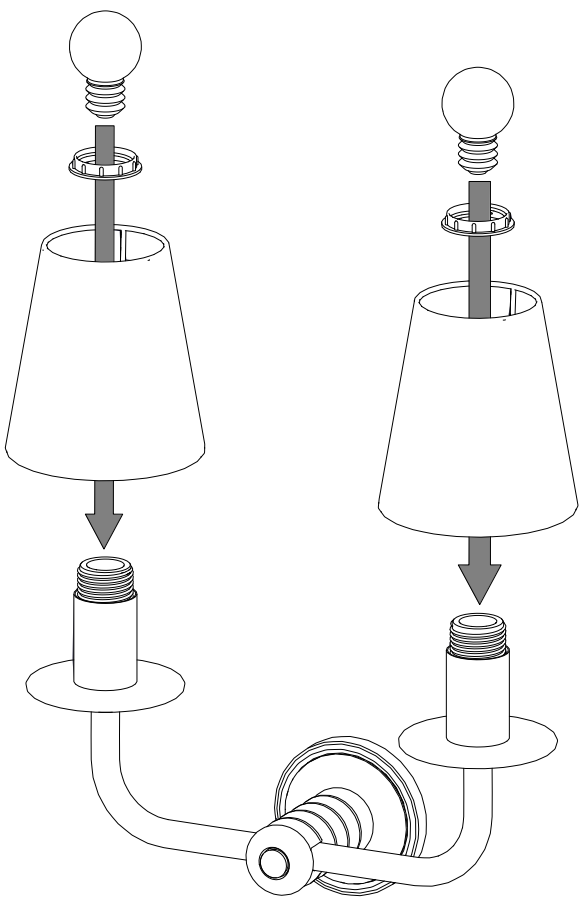

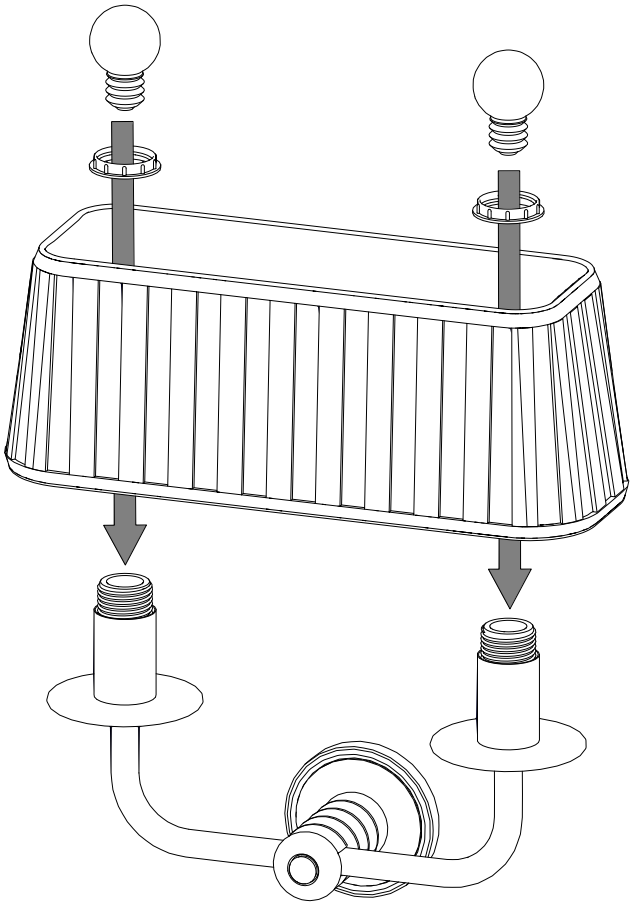

ELECTRICAL CONFIGURATION TABLE

FROM HOME	FROM LUMINAIRE
CONNECT BLACK OR RED (HOT) HOUSE SUPPLY CIRCUIT WIRE TO:	LUMINAIRE ROUND/BLACK WIRE (HOT)
CONNECT WHITE (NEUTRAL) HOUSE SUPPLY CIRCUIT WIRE TO:	LUMINAIRE RIBBED/WHITE WIRE (NEUTRAL)
CONNECT GREEN INSULATED OR BARE COPPER (GROUND -) HOUSE SUPPLY CIRCUIT WIRE AND LUMINAIRE BARE STRANDED WIRE (GROUND -) TO GREEN GROUND SCREW ON CROSSBAR.	

GENERAL NOTE: USE UL LISTED WIRE NUTS FOR THE WIRING CONNECTIONS IN THIS LUMINAIRE. WRAP WIRE NUT CONNECTIONS WITH UL LISTED ELECTRICAL TAPE.

FOR QUESTIONS, PLEASE CONTACT CLIENT SERVICES AT: 843.723.8140 OR INFO@URBANELECTRICCO.COM